RF-9011-07-1 Smart Repeater 433 MHz Installation Sheet

PCB front view

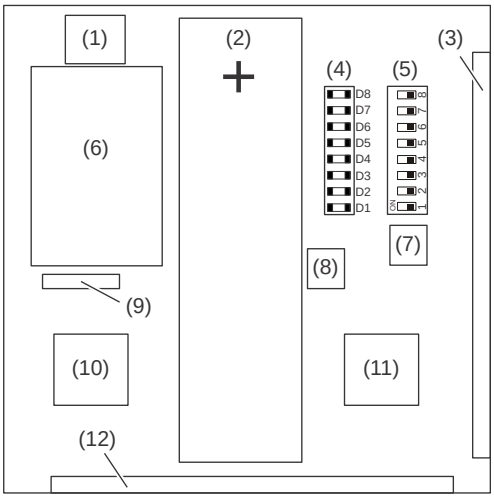

PCB back view

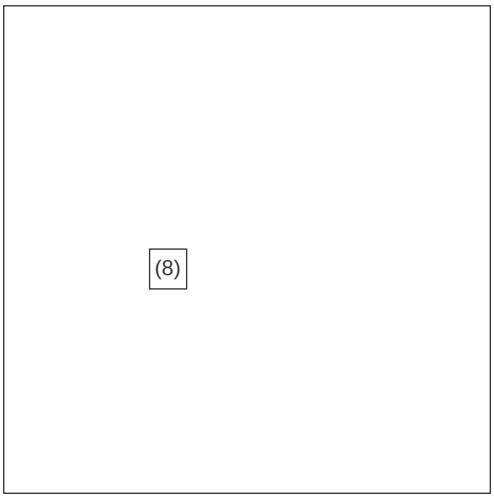

EN: Installation Sheet

WARNING! Electrocution hazard. To avoid personal injury or death from electrocution, remove all sources of power and allow stored energy to discharge before installing or removing equipment.

You must be free of static electricity before handling circuit boards. Wear a grounding strap or touch a bare metal surface to discharge static electricity.

Description

The purpose of the repeater is to receive and retransmit signals from wireless sensors, wireless keyfobs (only for 63bit protocol), and other repeaters.

Depending on protocol settings, the repeater supports either 433 MHz 63bit sensors, or 433 MHz LoNa sensors, but not both. See “DIP switch settings” on page 2 for details.

Figures: Device layout

(1)	230 VAC power connector	(7)	Diagnostic button
(2)	Battery	(8)	Tamper switch
(3)	Radio antenna for transceiver 2	(9)	Diagnostic connector
(4)	Status LEDs	(10)	Transceiver 1
(5)	DIP switch	(11)	Transceiver 2
(6)	Power supply unit	(12)	Radio antenna for transceiver 1

Symbol definitions

Item	Description
~	Alternating current
	Class II equipment
	Danger of electric shock

Installation guidelines

Installation only by a trained installer.

1. Mount and fasten the repeater to the wall with M4 flat head screws.
2. Fasten the tamper screw.
3. Connect power according to “Power options” on page 2.
4. Latch the housing cover so it locks securely into place.
5. Secure the housing with the protective screw at the side of the housing cover.

Follow below guidelines when installing the repeater:

- Before mounting the device, use D1 to D8 LEDs and check signal strength and noise floor.
- Strongly recommended at least 50 cm of clearance above the enclosure.
- Avoid areas with excessive metal or electrical wiring, including furnace and utility rooms.
- Avoid mounting in a location that exposes the module to high humidity.

P/N R466-5569-EN • REV B • DRAFT A03

- Do not use the repeater in combination with other repeater models.
- Mount the repeater only inside the supervised premises.

Repeater features

- Supervisory reports to the panel every 18 minutes.
- A double tamper switch that causes a tamper message if the front cover is removed or the repeater is detached from the wall.
- The repeater retransmits signals only from sensors and repeaters that have been learned into its database.
- Support for a rechargeable lithium ion backup battery.
- Low battery trouble reported.
- AC power failure reported.
- Jamming detection reported.
- 8 colour diodes that indicate system diagnostics. For details see “LED indication and the Diagnostic button” on page 5.

Tamper switch

Tamper switch consists of two buttons (front and back of the device) connected in series. If any of them is released the tamper message is sent. To remove the tamper condition both buttons need to be pressed in.

Power options

The repeater must be connected to the electrical system of the premises. Have a qualified person to connect 100–230 VAC (50–60 Hz) power cable to the power input connector.

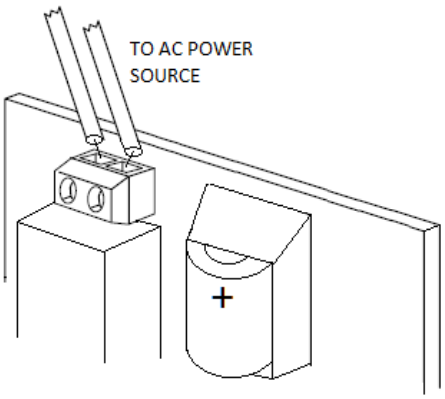

An all-pole mains switch should be incorporated in the electrical installation of the building.

A 3.6 V 3200 mAh lithium ion backup battery is included. Connect the battery to the circuit with the + pole located as shown in Figure above.

To fully charge the battery the device must be connected to the main power source for 48 hours.

If the device is planned to be without main power source for more than 72 hours (e. g. during transport or before installation), the battery should be disconnected.

WARNING: Lithium-ion battery!

Risk of burned skin, blindness, or death.

Risk of explosion or disabled safeguard if the battery is replaced by an incorrect type or subjected to extremely low air pressure.

Disposal of the battery into fire, hot oven or leaving it in an extremely high temperature surrounding environment, or mechanically crushing or cutting of the battery, can result in an explosion.

DIP switch settings

DIP switch default settings are shown in figure below.

Notes

- 1 means DIP switch is in the upper position, or ON
- 0 means DIP switch is in the lower position, or OFF
- Before proceeding with the installation all switches should be switched to 0

DIP 1: Walk test mode

DIP 6: Protocol

- On: 433 MHz 80+ LoNa
- Off: 433 MHz 63bit

Note: 433 MHz 63bit protocol is not certified by EN 50131 Grade 2 and INCERT. If you are using the repeater in this protocol, you must remove the certification label from the device.

DIP 7: Deleting single sensor

DIP 7 and DIP 8: Deleting repeater database

DIP 8: Sensor learn-in

Sensitivity reduction

To minimize possible effects of passive environment changes after installation, the sensitivity of the receiver is automatically reduced by minimum 8 dB when the repeater is in service mode (walk test or sensor learn-in mode).

Walk test mode

The repeater supports a “walk test” special operation mode, which allows you to verify the proper operation of the repeater and learned sensors.

To enable the walk test mode, set DIP switch 1 to On. The walk test mode is indicated on LEDs by intermittent switching of four upper and four lower LEDs.

Once the walk test mode is enabled on the repeater, perform the standard walk test procedure on sensors as specified in documentation of relevant intrusion panel.

Additionally, the repeater may be tested by pressing and holding the tamper button for at least 2 seconds.

Note: This functionality is supported on XGen/XGenConnect panels only.

The walk test mode can be disabled by setting the DIP switch 1 to Off.

Note: Walk test mode switches off automatically after 10 minutes if the repeater cover is closed (tamper switch is not activated). In such a case, in order to trigger the walk test mode again, you should set DIP switch 1 to Off, and then back to On.

Sensor learning

An installation may include up to 16 repeaters.

The total number of all devices, sensors and repeaters, may not exceed the maximum number of wireless sensors supported by the intrusion panel.

For example, if the panel supports up to 64 wireless sensors, and the setup requires 5 repeaters, then the system may support up to 64−5 = 59 sensors.

Repeaters can form different networks, for example:

- Chain – a network of repeaters with sensors

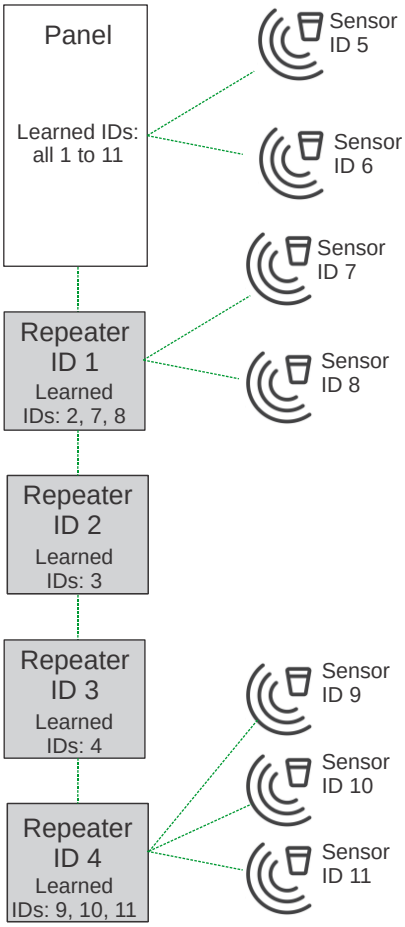

- Star – a network of repeaters with sensors

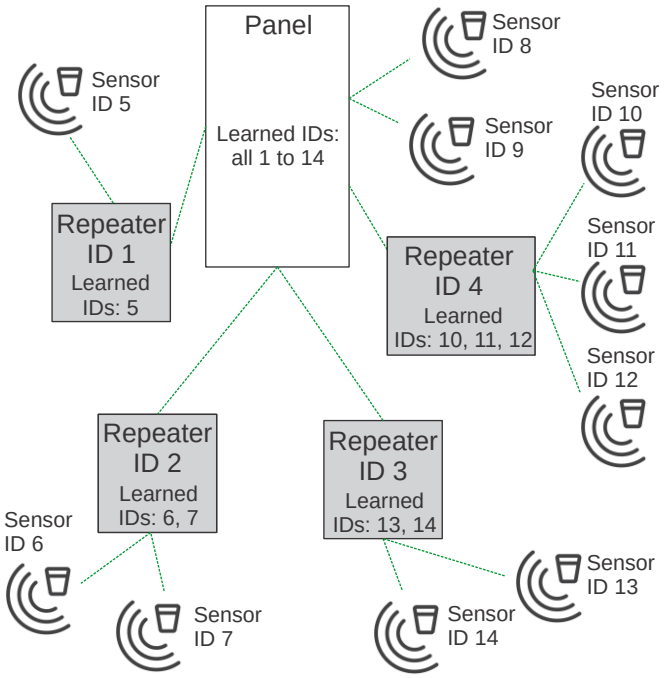

- A mixed network of repeaters with sensors

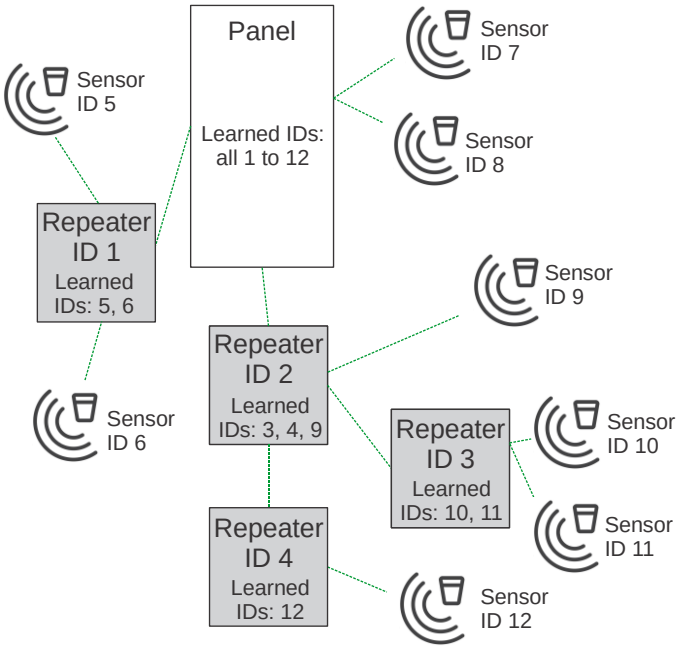

General rules for device learning

- All sensors and all repeaters must be learned into the panel. See sections 1 and 2 below for learning procedures.
- Sensor X should be learned into repeater Y only if the sensor X data is received directly by repeater Y. For example, in the mixed network in figure above:

  - Sensor ID 9 should be learned into repeater ID 2 (direct connection).

  - Sensors IDs 10, 11, and 12 should NOT be learned into repeater ID 2 (indirect connections).

  See “Learning sensors in repeaters” on page 4 for learning procedure.

- Repeater X should be learned into the repeater Y only if repeater Y is retransmitting signals from repeater X, and connection between them is direct.

  For example, in the mixed network in figure above:

  - Repeaters ID 3 and ID 4 should be learned into repeater ID 2.

  - Repeater ID 1 should NOT be learned into repeater ID 2 (no retransmition occurs between these two devices).

  See “Learning repeaters in repeaters” below for learning procedure.

Learning sensors in the panel

1. Start the Learn-in procedure on the panel.
2. Perform the learn-in procedure for each sensor that must be added to the installation. For details, refer to the sensor manual.
3. Confirm each sensor in the panel.

Learning repeaters in the panel

1. Start the Learn-in procedure in the panel.
2. For safety reasons, disconnect AC from the repeater.
3. Activate tamper (if operating in 63bit mode),

   — or —

   press the diagnostic button for at least 3 seconds (if operating in 80+ LoNa mode).

   Do it for each repeater in the system.
4. Confirm each repeater in the panel.

Learning sensors in repeaters

1. On the first repeater, change the DIP Switch 8 state to On (configuration switch) to enable learning of sensors into the repeater.
2. Perform a learn-in procedure on each sensor that must be added to the first repeater’s database.
3. Disable the learn-in mode on the first repeater – change DIP switch 8 back to Off.
4. Put the next repeater in the learn-in mode.
5. Perform a learn-in procedure on each sensor that must be added to the next repeater’s database.
6. Disable the learn-in mode on the repeater.
7. Repeat steps 4 to 5 for other repeaters.

Learning repeaters in repeaters

If one repeater is supposed to retransmit signals from another one (in a chain or mixed configuration) an additional learning procedure for each such pair of repeaters needs to be performed:

1. Put the repeater which should retransmit signals from another repeater in the learn-in mode – DIP Switch 8 to On.
2. Activate the tamper switch on the repeater to which you want the signals to be retransmitted. The retransmitting repeater should signalize the learn-in with LEDs D1 to D8.
3. Disable the learn-in mode on the retransmitting repeater.

Repeater configuration limits

Maximum number of repeaters in a repeater’s database: 4.

Maximum number of sensors in a repeater’s database: 64.

Note: The maximum number of sensors should not exceed the maximum number of sensors supported by the panel. For more information, see panel specifications.

Maximum number of repeaters in daisy chain: 4.

Maximum number of repeaters in one system: 16.

Removing a single sensor/repeater from the repeater

1. On the repeater, set the DIP switch 7 to the ON position.
2. Perform a learn-in procedure on the sensor you want to delete.
3. The LEDs on the repeater will start blinking in a characteristic pattern - from D4 and D5 outwards.
4. When finished, set the DIP switch 7 to the Off position.
5. Now remove the sensor also from the panel/receiver database using the panel’s menu.

Installation tips for the repeater

If during installation it is not possible to achieve an optimal signal because of a high noise floor (when LEDs show: minimum level – problem):

1. Perform an additional test, checking if Minimum Level / Range Limit is achieved.
2. If there are any objects that are covering the repeater, try to move them so the repeater has free space around it.
3. Try to move the repeater 10 to 20 cm along the wall to lower any kind of RF noise.
4. Find another spot in the room where a power socket is available.

If during installation it is not possible to achieve an optimal signal because of the signal quality level of packets (when LEDs show: minimum level / range limit):

1. Perform an additional test, checking the High Noise Level (Diagnostic button option).
2. If there are any objects that are covering the repeater, try to move them so the repeater has free space around it.
3. Try to move the repeater 10 to 20 cm around the wall to lower any kind of RF noise.
4. Find another spot in the room where a power socket is available.

See the figure below for additional information.

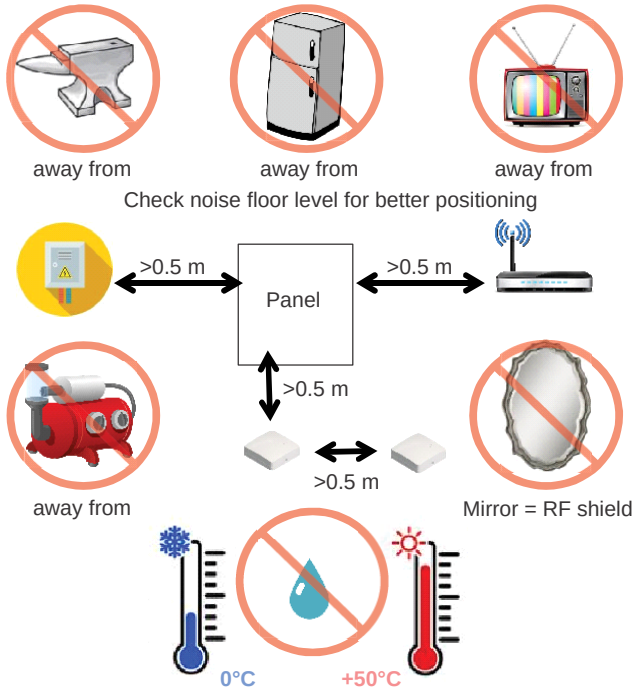

Deleting the repeater's entire database

1. On the repeater, set the DIP switches 7 and 8 to the On position. Diodes D1 to D8 will start to show a characteristic pattern.
2. Wait at least 5 seconds. During this timeout the database is not being deleted. There is the possibility to stop the process by switching DIP switch 7 and/or 8 to Off.
3. After the timeout the LEDs on the repeater will show a different pattern – from D4 and D5 outwards. The database is being deleted.
4. Set the DIP switches 7 and 8 to the Off position.
5. Remove the sensors from the panel/receiver database using the panel's menu, if necessary.

LED indication and the Diagnostic button

Note: For the LED indication and the Diagnostic button to work, DIP switches 7 and 8 must be both in the Off position.

When the repeater cover is opened, the diagnostic LEDs start to show one of the following values.

Signal Quality Level

When any of the tamper buttons (there is a front tamper on the top of the repeater, and a back tamper on the bottom) is released, the LEDs D2 to D8 (from LED D2 upwards) start to show the quality level of packets received from known sensors. LED D1 flashes once every second.

- D8 excellent quality
- D7 very good quality
- D6 good quality
- D5 poor quality
- D4 minimum level
- D3 problem / out of range
- D2 out of range

Noise Floor Level

Push the Diagnostic button once more to show the noise floor level from the last transmission on LEDs D2 to D8 (from LED D8 downwards). LED D1 will flash twice every second.

- D8 low noise level
- D7 good level
- D6 acceptable level
- D5 poor level
- D4 high level
- D3 very high level
- D2 not install – jamming

Installer Mode

Push the Diagnostic button once more to enter the installer test mode.

In this mode the receiver sensitivity is reduced by 8 dB. LEDs D2 to D8 (from LED D2 upwards) show the signal strength of the last sensor heard whether it is learned-in or not. LED D1 will flash thrice every second.

- D8 excellent strength
- D7 very good strength
- D6 good strength
- D5 poor strength
- D4 minimum strength
- D3 problem / out of range
- D2 out of range

Battery Level

Push the Diagnostic button once more to show the battery level.

LEDs D2 to D8 (from LED D2 upwards) will display the battery charge level. LED D1 will flash 4 times every second.

- D8 > 4.0 V (excellent)
- D7 > 3.85 V (very good)
- D6 > 3.7 V (good)
- D5 > 3.55 V (poor)
- D4 > 3.4 V (very poor – report battery low)
- D3 > 3.0 V (critical – report battery low)
- D2 ≤ 3.0 V (device turning off – report battery low)

Press the button once more to go back to the first option – Signal Quality Level.

When the repeater cover is closed and the repeater is installed on the wall (both tamper switches are closed) during any of the diagnostic modes, the repeater goes back to Signal Quality Level mode and the LEDs are turned off.

Power failure indication

In addition, if there is a mains or battery fault, LED D1 flashes in the following pattern:

- Mains fault: D1 flashes 5 times.
- Battery fault: D1 flashes 6 times.

LED Patterns

Sensor/repeater learned-in

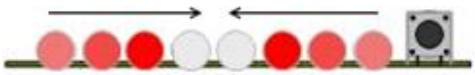

Sensor/repeater removed

Specifications

Compatibility	UTC Fire & Security 433 MHz Transmitter Range
Input power	100 to 230 VAC
Power supply type	Type A
Mains frequency	50 to 60 Hz
Current consumption	11.0 to 24.2 mA
Wireless operating frequency:	
63bit	433.92 MHz
80+ LoNa	433.65 MHz
Allocated frequency band	433.05 to 434.79 MHz
Maximum power output	10 dBm
Operating temperature	0 to +40°C
Maximum relative humidity	80% noncondensing
Repeater dimensions (L x W x D)	102 x 102 x 33 mm
Battery type	3.6 V, 3200 mAh lithium Samsung INR18650-35E, Panasonic NCR18650B
Minimum energy level of the battery in its charged state	87%
Battery low threshold	3.4 V
Battery deep discharge protection level **Note:** Below this value battery is considered as short circuited and not charged.	2.5 V
Battery included	18650 Li-ion battery cell
Total equipment weight	< 1 kg

Indoor use only.

Regulatory information

Manufacturer	UTC Fire & Security Americas Corporation, Inc. 3211 Progress Drive, Lincolnton, NC, 28092, USA Authorized EU manufacturing representative: UTC Fire & Security B.V. Kelvinstraat 7, 6003 DH Weert, Netherlands
Warnings and Disclaimers	THESE PRODUCTS ARE INTENDED FOR SALE TO AND INSTALLATION BY QUALIFIED PROFESSIONALS. UTC FIRE & SECURITY CANNOT PROVIDE ANY ASSURANCE THAT ANY PERSON OR ENTITY BUYING ITS PRODUCTS, INCLUDING ANY “AUTHORIZED DEALER” OR “AUTHORIZED RESELLER”, IS PROPERLY TRAINED OR EXPERIENCED TO CORRECTLY INSTALL FIRE AND SECURITY RELATED PRODUCTS. For more information on warranty disclaimers and product safety information, please check https://firesecurityproducts.com/policy/product-warning/ or scan the QR code.
Version	This document applies to the following firmware version or higher: 201
Certification	CE
	EN 50131-3, EN 50131-5-3, EN 50131-6 Security Grade 2, Environmental class II Tested and certified by Telefication B.V.
INCERT	C-001-1503 T031+A1
European Union directives	UTC Fire & Security hereby declares that this device is in compliance with the applicable requirements and provisions of all applicable rules and regulations, including but not limited to the Directive 2014/53/EU. For more information see: firesecurityproducts.com
	This product may contain a battery that cannot be disposed of as unsorted municipal waste in the European Union. See the product documentation for specific battery information. The battery is marked with this symbol, which may include lettering to indicate cadmium (Cd), lead (Pb), or mercury (Hg). For proper recycling return the battery to your supplier or to a designated collection point. For more information see recyclethis.info
	2012/19/EU (WEEE directive): Products marked with this symbol cannot be disposed of as unsorted municipal waste in the European Union. For proper recycling, return this product to your local supplier upon the purchase of equivalent new equipment, or dispose of it at designated collection points. For more information see: recyclethis.info

Contact information

firesecurityproducts.com or www.interlogix.com

Sensors learned in the repeater

Number	Sensor ID	Sensor type
1		
2		
3		
4		
5		
6		
7		
8		
9		
10		
11		
12		
13		
14		
15		
16		
17		
18		
19		
20		
21		
22		
23		
24		
25		
26		
27		
28		
29		
30		
31		
32		
33		
34		
35		
36		
37		
38		
39		
40		
41		
42		
43		
44		
45		
46		
47		
48		
49		
50		
51		
52		
53		
54		
55		
56		
57		
58		
59		
60		
61		
62		
63		
64		

Repeaters learned in the repeater

Number	Repeater ID
1	
2	
3	
4	